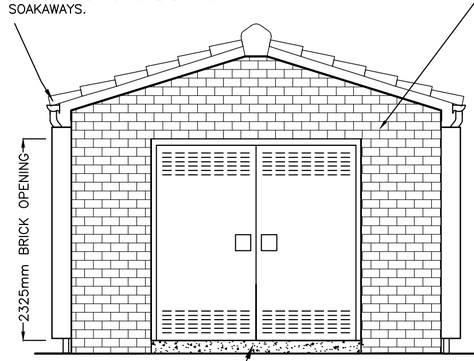


## FRONT ELEVATION

NOTE:
CAPABLE OF RECEIVING
'MERLIN GERIN' or
LUCY 'SABRE' HV SWITCHGEAR

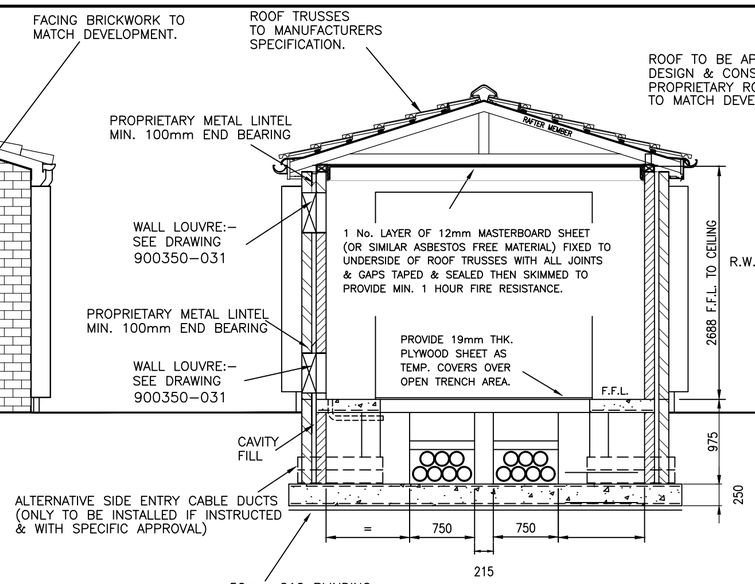


## SECTION A–A

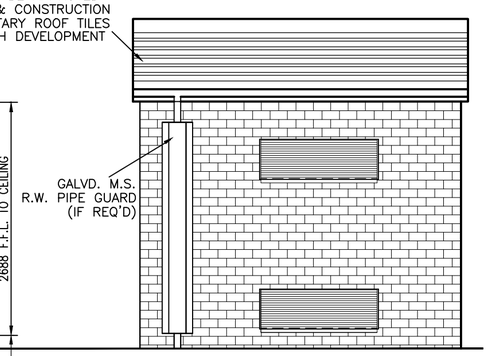


## TYPICAL SIDE ELEVATION X

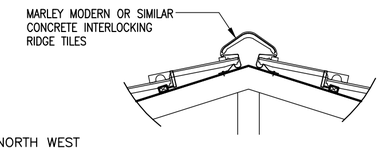


DRY VENTILATED RIDGE DETAILS

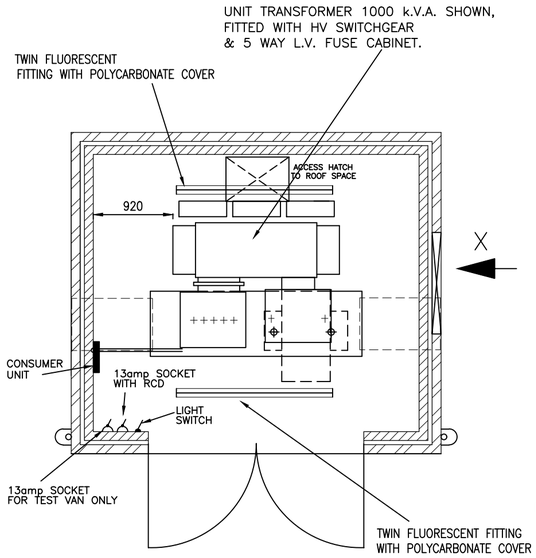


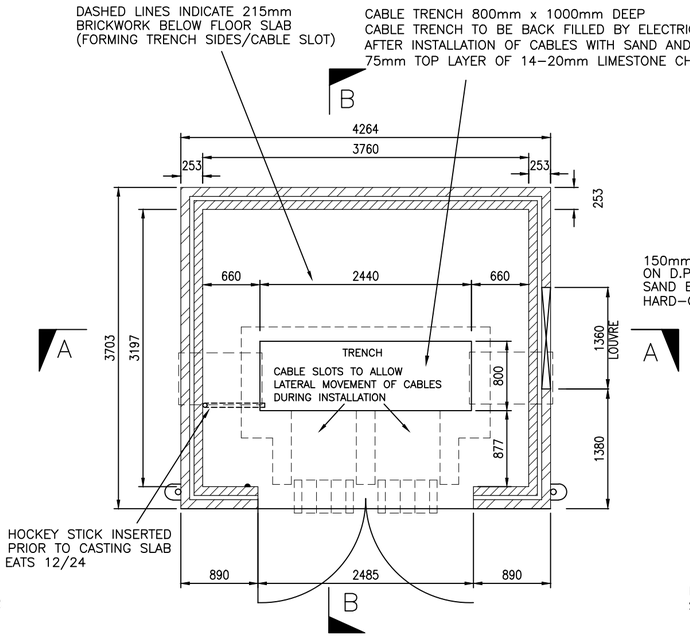


## FLOOR PLAN

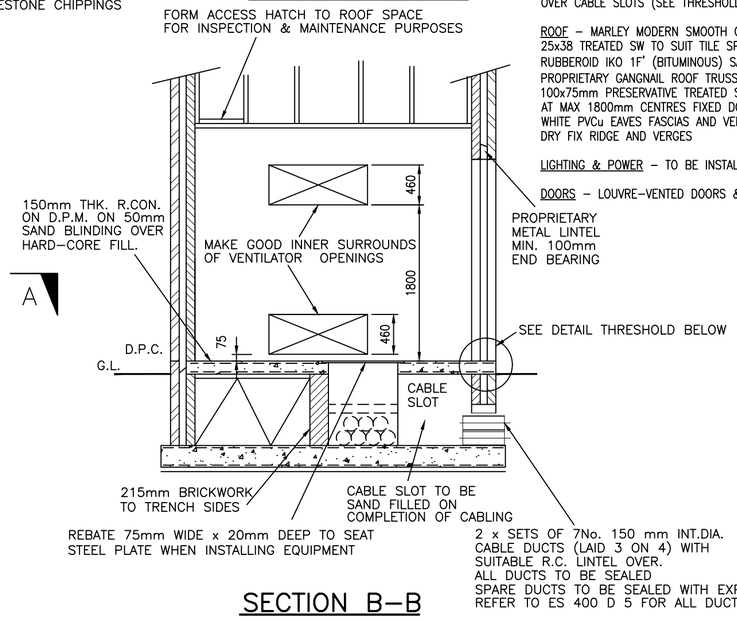


## SECTION B–B

NOTES:

CONCRETE FOR BASES TO BE 1:2:4 MIX OF ORDINARY PORTLAND CEMENT
CONCRETE 35N/mm² (28 DAY STRENGTH)
20mm AGGREGATE SHALL BE PLACED & COMPACTED WITHIN ADEQUATE FORMWORK TO ENSURE THAT THE TOP SURFACES ARE TRUE TO PLANE WITH LEVEL FAIR FACE TROWEL FINISH.
NO DRILLING TO TAKE PLACE WITHIN 28 DAYS OF CASTING.
NO PERCUSSION DRILLS TO BE USED ONLY ROTARY DRILLS.
DO NOT OVER TIGHTEN BOLTS.
TYPICAL MAX WEIGHT OF PLANT = 6000Kg.

FOUNDATIONS – TO BE TAKEN DOWN TO GROUND THAT IS SUFFICIENTLY FIRM TO PROVIDE PHYSICAL SUPPORT TO THE STRUCTURE. SITE PHOTO'S TO BE TAKEN INDICATING EVIDENCE OF FOUNDATION DEPTH WHERE INCREASED DIG IS GREATER THAN 400mm.
THESE WILL BE PROVIDED FOR PAYMENT AND AUDIT PURPOSES.
FOUNDATIONS/PLINTH MUST BE SUITABLE WITH RESPECT TO GROUND CONDITIONS AND LOADING, AND MUST BE APPROVED BY ON–SITE STRUCTURAL ENGINEER.

CABLE TRENCH TO BE 800mm WIDE & 1000mm DEEP. CABLE TRENCH TO BE BACK–FILLED AFTER INSTALLATION OF CABLES WITH SAND AND 75mm TOP LAYER OF 14–20mm LIMESTONE CHIPPINGS.

FOR DESIGN PURPOSES, OPERATIONAL & JOINTING CLEARANCES HAVE BEEN BASED ON A 1000KVA TRANSFORMER & 5 WAY FUSE CABINET AS SHOWN.

SURFACE WATER DRAIN TO BE CONNECTED TO EXISTING IN A MANNER & AT A POINT TO BE AGREED WITH THE LOCAL AUTHORITY.

CABLE DUCTS TO BE SEALED AFTER INSTALLATION OF CABLES. SPARE DUCTS TO BE SEALED WITH EXPANDING FOAM AND DUCTS WITH CABLES TO BE SEALED. REFER TO ES 400 D 5 FOR ALL DUCTING SPECIFICATIONS.

WALLS – FOUNDATION TO GROUND LEVEL: TRENCH BLOCK OR 2No LEAVES OF ENGINEERING QUALITY BRICKWORK WITH 50mm CAVITY FILLED WITH WEAK MIX CONCRETE.
GROUND TO DAMP PROOF COURSE (DPC) LEVEL: 102.5mm ENGINEERING BRICK (IBSTOCK STAFFORDSHIRE SMOOTH SLATE BLUE)
OUTER LEAF, 50mm CAVITY AND 100mm 7N/mm² BLOCKWORK INNER LEAF
HORIZONTAL DPC IN PITCH POLYMER, OR SIMILAR, ALL AROUND
ABOVE DPC LEVEL: 102.5mm FACING BRICKWORK (IBSTOCK CHESTER RED BLEND) OUTER LEAF, 50mm CAVITY AND 100mm 7N/mm² BLOCKWORK INNER LEAF. SOLDIER BRICK OUTER LEAF ABOVE DOOR IN IBSTOCK STAFFORDSHIRE SMOOTH SLATE BLUE ENGINEERING BRICK
CAVITY WALL TIES: HALFEN HTS C12 x 200mm STAINLESS STEEL CAVITY TIES AT MAX 750mm HORIZONTAL CTRS, 450mm VERTICAL CTRS & 225mm VERTICAL CTRS WHERE WITHIN 300mm OF THE OPENING.
LINTEL OVER DOOR: HARVEY A/MC80EB/F IN STAINLESS STEEL, OR SIMILAR APPROVED, WITH MIN 150mm END BEARINGS.
MORTAR: CEMENT:LIME:SAND 1:1:6 MIX COLOUR NATURAL WITH BUCKET HANDLE POINTING.
CAVITY CLOSERS: BLOCKWORK RETURNED AGAINST THE BRICKWORK INCLUDING A VERTICAL DPC
FLOOR – STEEL FLOAT FINISH TO 3mm IN 3m LENGTH 150mm THK. C35 REINF. CONCRETE WITH A252 MESH AT BOTTOM + (40mm COVER) ON D.P.M. AND 50mm SAND BLINDING – OVER COMPACTED HARDCORE FILL. EXTRA REINFORCEMENT REQUIRED OVER CABLE SLOTS (SEE THRESHOLD DETAIL)

ROOF – MARLEY MODERN SMOOTH GREY INTERLOCKING CONCRETE ROOF TILES WITH MINIMUM 100mm HEADLAP ON 25x38 TREATED SW TO SUIT TILE SPACING ON
RUBBEROID IKO 1F' (BITUMINOUS) SARKING MEMBRANE TO BS EN 13707, BS 8747:2007 OR SIMILAR, ON
PROPRIETARY GANGNAIL ROOF TRUSSES (OR LOOSE RAFTERS) AT MAX 600mm CENTRES AND 17.5' PITCH, ON
100x75mm PRESERVATIVE TREATED SW WALLPLATE FIXED DOWN TO TO TOP CAVITY WALL INNER LEAF USING 30x5mm MS STPAPS AT MAX 1800mm CENTRES FIXED DOWN BLOCKWORK WALL
WHITE PVCu EAVES FASCIAS AND VENTILATED SOFFITS
DRY FIX RIDGE AND VERGES

LIGHTING & POWER – TO BE INSTALLED IN ACCORDANCE WITH ES 397.

DOORS – LOUVRE–VENTED DOORS & IRONMONGERY TO ELECTRICITY NORTH WEST STANDARD SPECIFICATION

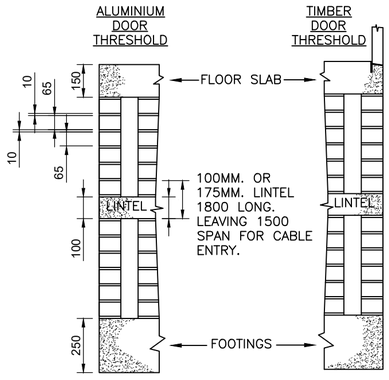


SECTION THRESHOLD DETAIL

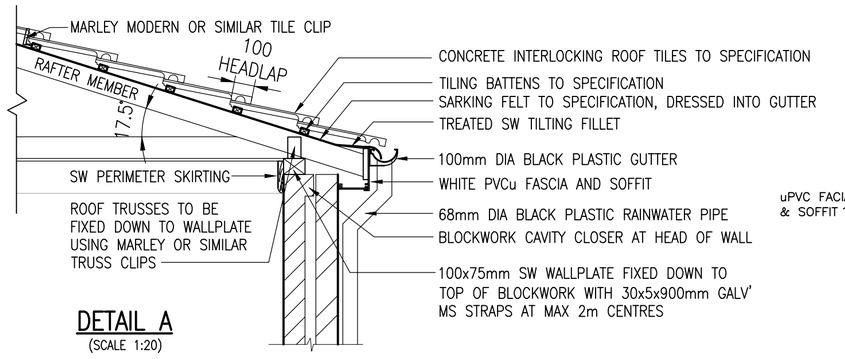


## DETAIL A
(SCALE 1:20)

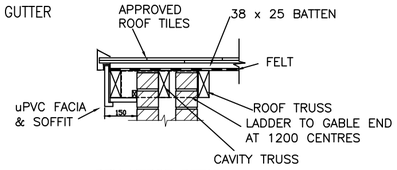


DRY VERGE DETAIL

THIS DRAWING SHOULD BE READ IN CONJUNCTION WITH ELECTRICITY NORTH WEST ES 352, ES 397 & ES 326 AND ALL ASSOCIATED WORKS MUST COMPLY WITH THIS INFORMATION AND DETAIL IN FULL

electricity north west
FREDERICK ROAD, SALFORD
M6 6QH
TEL 0161 6041370

CIVIL DISTRIBUTION SUBSTATION
CONSTRUCTION DETAILS FOR
INDOOR UNIT SUBSTATION

| | | | | | | | |
|---|---|---|---|---|---|---|---|
| DRAWN | ASR | SCALE | 1:25 | SITE NAME | – | | |
| APPROVED | WD | DATE | NOVEMBER 18 | P.F.R. NO. | – | DWG STATUS | APPROVAL |
| OLD DWG NO | – | SHEET SIZE | A2 | DWG NO | 900350–028 | REV | 1 |